

ASYMTEK Quantum Q-6800 Series

Automated Fluid Dispensing with Advanced Process Control



The Quantum® Q-6800 Series offers uncompromising quality, speed, flexibility, and value with batch and inline dispensing for automotive, PCBA, and various electronic assembly applications.

The system includes a calibration station and advanced closed-loop process controls such as a fluid weight scale, patented Mass Flow Control (MFC), and Calibrated Process Jetting (CPJ). These controls ensure the right amount of material is dispensed for each part from the beginning to the end of the production run. Dynamic Dispense Control (DDC) provides precise valve control for more accurate placement of dots and lines.

With over 30 years of precision fluid dispensing experience, our worldwide engineering, applications development, and technical service network provide expert support from initial process development through full-scale production.

Features and Benefits

- Supports CSP, BGA, and board-level underfill.
- Supports surface mount adhesive, corner and edge bonding, dam and fill, potting and encapsulation, conductive epoxy, and case assembly applications.
- Large dispense area (423 x 458 mm) ideal for dual-valve dispensing and a range of substrate sizes.
- Range-finding laser height sensor enables fast, non-contact dispense height measurement.
- A digital vision system with enhanced vision software enables quick finding and teaching of fiducials even when targets vary in size, contrast, or rotation.
- Patented CPJ process control automatically compensates for changes in fluid viscosity for higher yield.

Nordson Electronics Solutions

ASYMTEK Quantum Q-6800 Series

Specifications

Dispense Area (X-Y) [1]	423 x 458 mm (16.7 x 18.0 in.), single applicator with offsets for vision and height sense; tooling size dependent.	
Board Handling [1] Not applicable for the Batch configuration.	Max. board/carrier thickness	12 mm (0.5 in.)
	Min. board/carrier width	25 mm (0.98 in.)
	Max. board/carrier width	Single lane: 520 mm (20.4 in.) Dual lane: up to 220 mm (8.6 in.)
	Min. board/carrier length	25 mm (0.98 in.)
	Max. board/carrier length	One station: 600 mm (23.6 in.) Three stations: 320 mm (12.6 in.)
Computer	Laptop	
Software	Fluidmove® fluid dispensing software	
Facilities Requirements	System footprint	1100 x 1241 mm (43.3 x 48.8 in.)
	System weight [2]	435-490 kg (960-1080 lbs.)
Standards Compliance	SEMI-S2 SEMI-S8 SMEMA CE	
Optional Features	• Dual applicator support • Dual-lane configuration • Fids-on-the-Fly software for high-speed fiducial capture • Pre and post-queue stations • SECS/GEM interface	

(1) Contact the factory regarding other travel distances and board/carrier size compatibility.
(2) System weight varies depending on the configuration.

Nordson Electronics Solutions

ASYMTEK Quantum Q-6800 Series

System Packages

From smartphones and vehicles to advanced electronic systems, reliable products begin with precise manufacturing. For decades, Nordson Electronics Solutions has empowered manufacturers worldwide with technologies that improve electronics reliability and production performance. There's a good chance a product you own today was made more reliable with Nordson equipment.

Designed for demanding automotive, PCBA, and electronic assembly environments, the Quantum Q-6800 Series combines accuracy, flexibility, and performance in a powerful fluid dispensing platform.

Explore the Quantum Q-6800 system packages and elevate your dispensing capabilities.

For more information, contact us at info-electronics@nordson.com.

Essential	Single-valve dispensing.	An economically efficient and reliable single-valve dispensing solution designed for automotive, PCBA, and various electronic assembly applications.
Productivity	Dual-action and pre-queue dispensing.	Accelerate throughput with dual-action dispensing and pre-queue process capabilities. Dispense two materials to the same part with dual action to increase throughput by up to 25%.
Productivity Plus	Dual-action and pre and post-queue dispensing.	Dual-action dispensing of two materials accelerates throughput, while pre and post-queue processing reduces transport time for maximum productivity.

Recommended Options

Software Enabled	SECS/GEM CAD Import Software, Windows®
Conveyance and Tooling	Standard tooling Flexible impingement tooling Custom tooling (with approval)
Fluid Delivery	Magnetic low fluid sensor Capacitive low fluid sensor Needle heater
Power Kit	European power cord

Nordson Electronics Solutions

ASYMTEK Quantum Q-6800 Series

System Dimensions

Front View

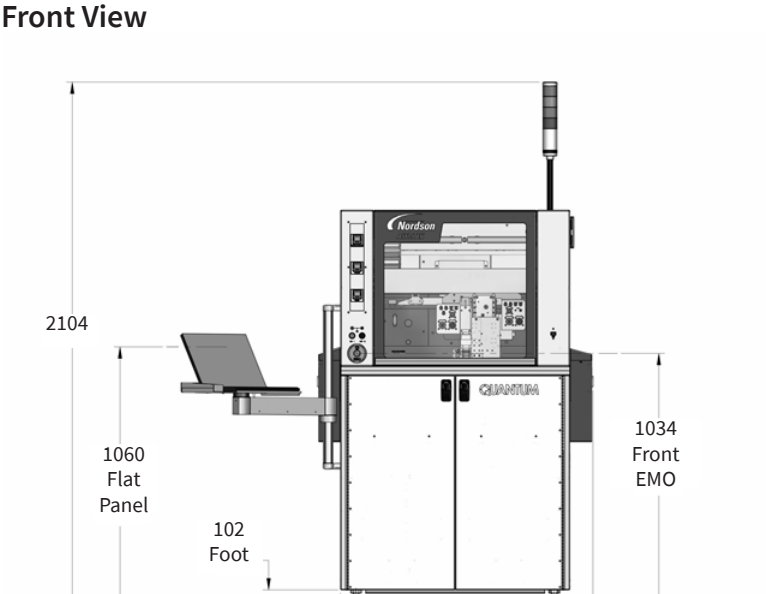

Side View

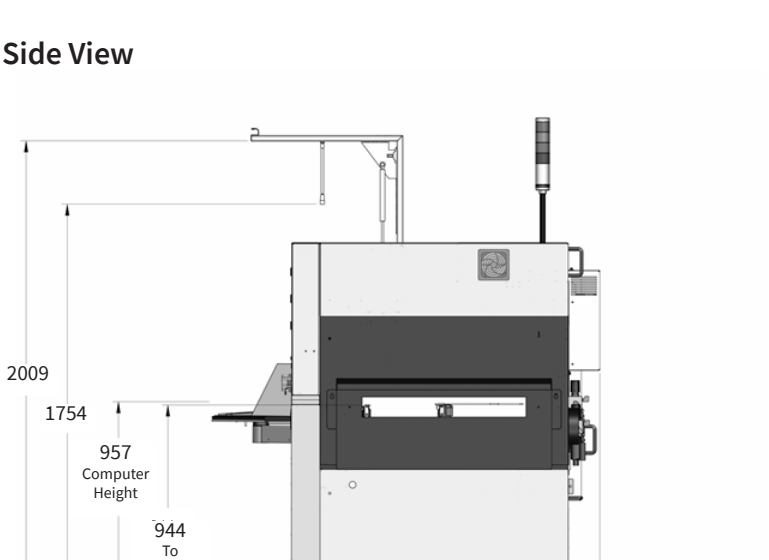

Dimensions in millimeters.

For more information, visit our website to find your local regional office or representative.

We have several global locations to serve you.

North America
Asia Pacific
EMEA

www.nordson.com/electronics
info-electronics@nordson.com

North America Headquarters
2762 Loker Avenue West
Carlsbad, CA 92010-6603, USA

+1.760.431.1919

July 2026

Nordson Electronics Solutions